THERMOMETRICS
A COMMITMENT TO EXCELLENCE
AN AMPHENOL COMPANY

LET-Basic

Alarm module (Non Locating)

Detection Module



The **Thermometrics LET-Basic Alarm Module** adopts standard MODBUS-RTU protocol and asynchronous serial 2-wire RS485 port. The host computer data reading interval shall be ≥500ms (recommended 1s). Its default device address is 01, configurable via host computer commands or LEAK-Talk software. It supports BACnet IP and Modbus RTU/TCP.

Features

- LET-Basic Alarm module is small in size, and all installation and operation can be easily completed without opening the module
- The Alarm module is an alarm mode of automatic reset after leak elimination. The output of alarm indicator, buzzer and relay follow the automatic reset
- Stepless adjustment of detection sensitivity, one key mute button for alarm, and buzzer setting switch
- LET-Basic Alarm module is suitable for air conditioning equipment, computer room, liquid container, pump tank and other occasions where leakage monitoring and alarm are needed
- Total Cable Length 500 meters
- Small size, guide rail installation
- One-click silence, automatic reset function
- RS485 MODBUS Communication
- Stepless adjustment of detection sensitivity, one key mute button for alarm, and buzzer setting switch
- LET-Basic Alarm module is suitable for air conditioning equipment, computer room, liquid container, pump tank and other occasions where leakage monitoring and alarm are needed

Technical Descriptions

Part	Description
Detection Cable	It can be compatible with all kinds of Water sense cable or detection electrodes
Detection Cable Length	Maximum length of connectable cable is 500 meters
Detection Sensitivity	0-10 K stepless adjustment, response time less than 1 second (when sensitivity is highest)
Dimensional Weight	Shape size L86 * W 55 * H58mm; Weight 9 3g
Plastic Shell	White Fire - proof ABS Material, DIN35mm Guide Installation
Power Requirements	12-24 VDC / AC, standby current 70 mA, alarm current 120 mA
Relay Output	1 SPDT usually open and close output, rated power 60 VDC / 2A or 220 VAC / 2A
RS485 Output	RS + RS - two - wire communication interface, device address 1-255

Amphenol
Sensors

LET-Basic Sensor Specifications

CAUTION

Please carefully confirm the power supply voltage before powering on, and ensure that the power cable is connected to the correct port, otherwise the Alarm module may FAIL.

Power
12-24 VDC / AC Power Supply connection regardless of positive and negative poles.

Power LED
Power indicator lights are always on when working.

Leak Sense Cable
Connect the Water sense cable or the detection electrode.

Note: Device is non-polarized. Either lead may be connected to either terminal.

Sensitivity
Counterclockwise rotation reduces sensitivity. The sensitivity of point A is the lowest. More water can trigger the alarm.

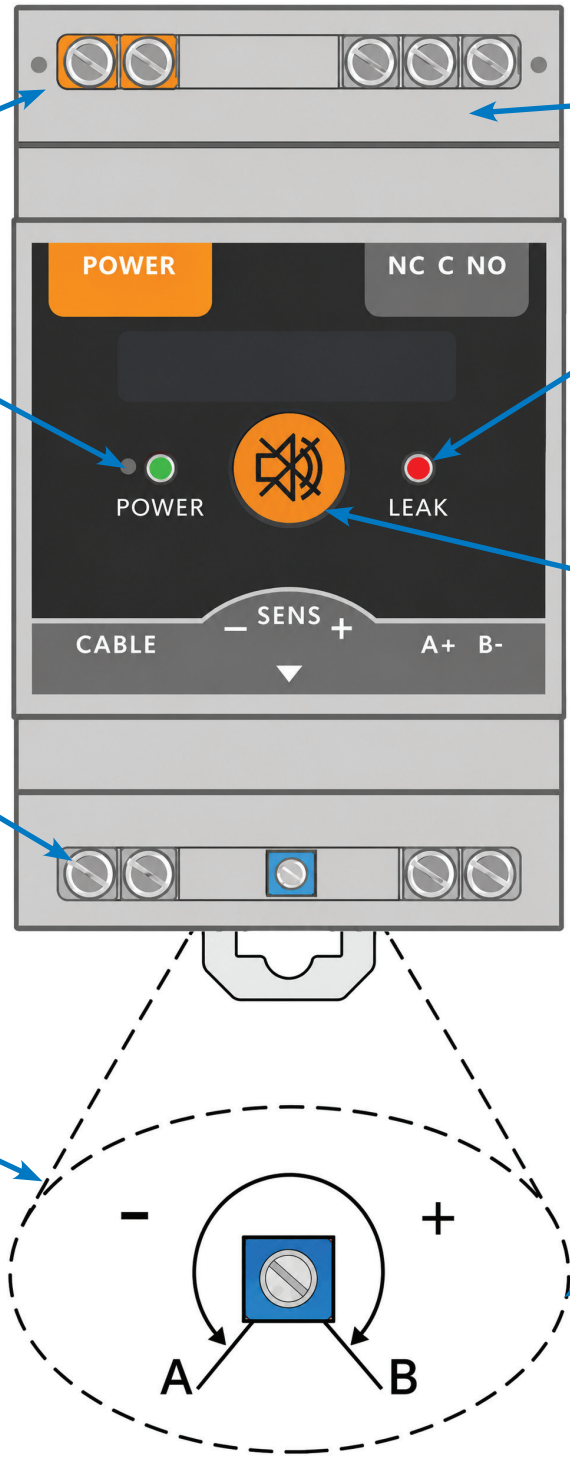

Alarm Output
Relay dry contact signal output:
13- NC (normally closed)
14- COM (public terminal)
15- NO (normally open)
Rated power 220 VAC / 2A

Alarm Indicator: Red Light When Leaking
When the power is turned on, the red alarm lights will flicker three times and then go out.

Mute Button to Eliminate Alarm Sound:
When the power is turned on, the alarm buzzer will ring six times before stopping.

RS485 Interface
RS485 two - wire communication, 8 - RS+, 9 - RS-

Sensitivity
Rotate clockwise to increase the sensitivity. The sensitivity value of point B is the largest, which can detect water droplets and alarm.

Notes:

1. The maximum length of the Alarm module can be connected to the Water sense cable is 500 meters (excluding leader cable and jumper cable).
2. The Alarm module is in the automatic reset mode. It can stop alarming and restore to standby state only after the leak has stopped and the cable returned to its dry state is removed.
3. The detection sensitivity is set to normal value and the device address is set to 01 by default.
4. Leak controller unit is not waterproof. Controller must be protected as required.

LET-Basic Sensor Specifications

Typical Application System Diagram

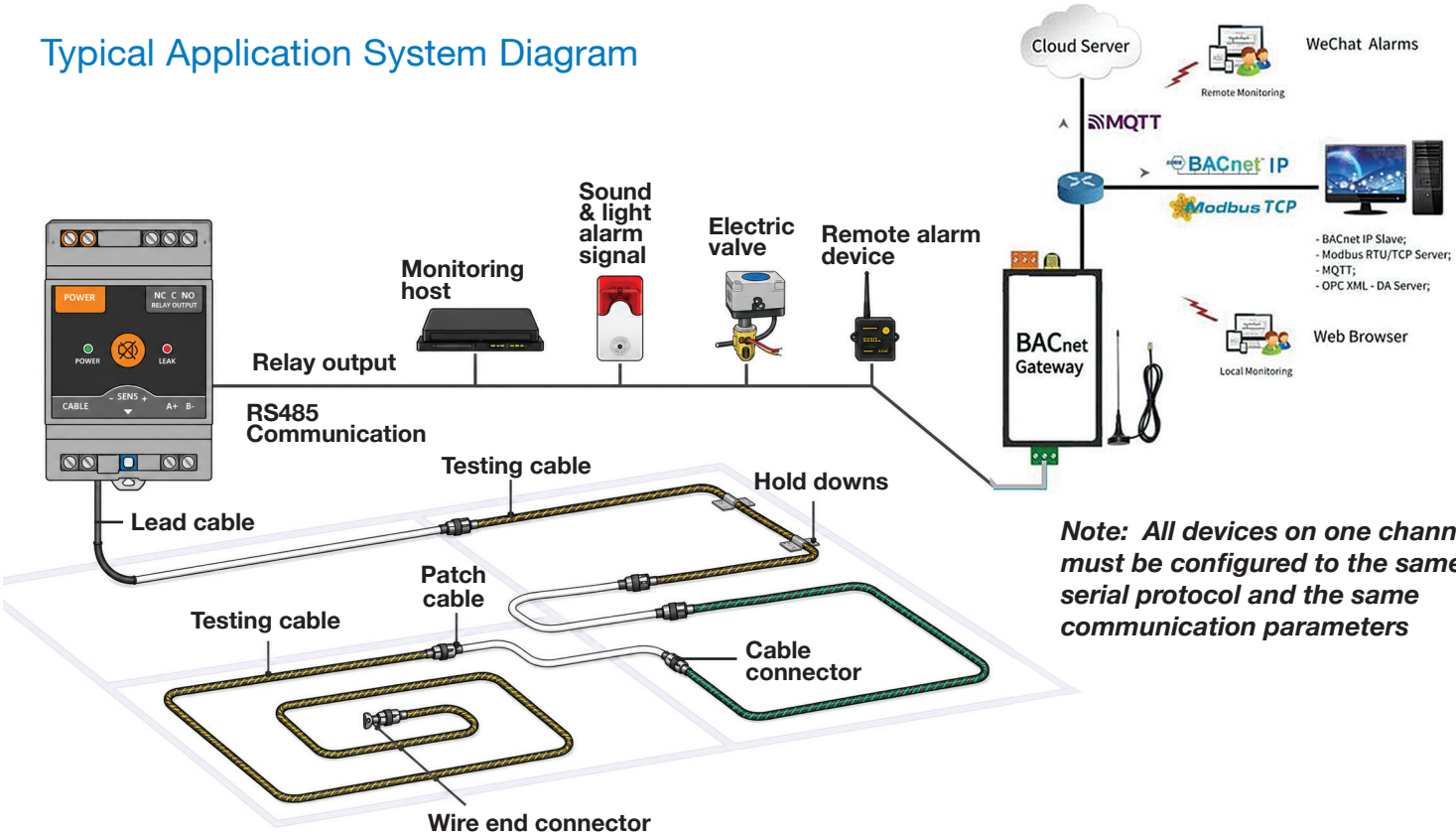

Note: All devices on one channel must be configured to the same serial protocol and the same communication parameters

Sense Cable Layout



Cover the whole area
Comprehensive protection for critical areas

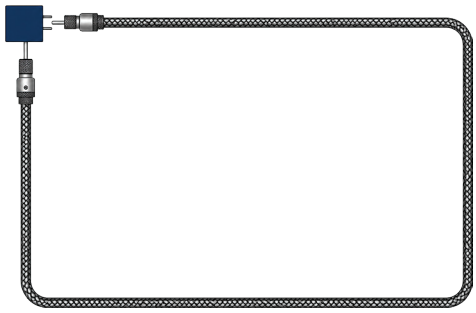

Cover the edge area
Prevent leaks from immersing in or spreading out

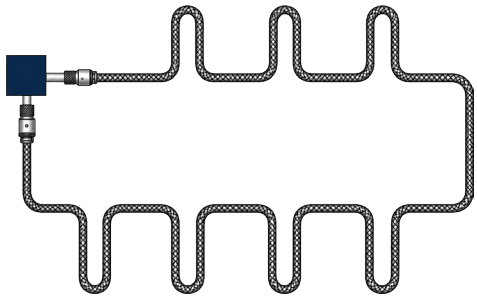

Covering air - conditioned areas Key protection against major leakage sources such as air conditioners

Sense Cable Installation and Fixing

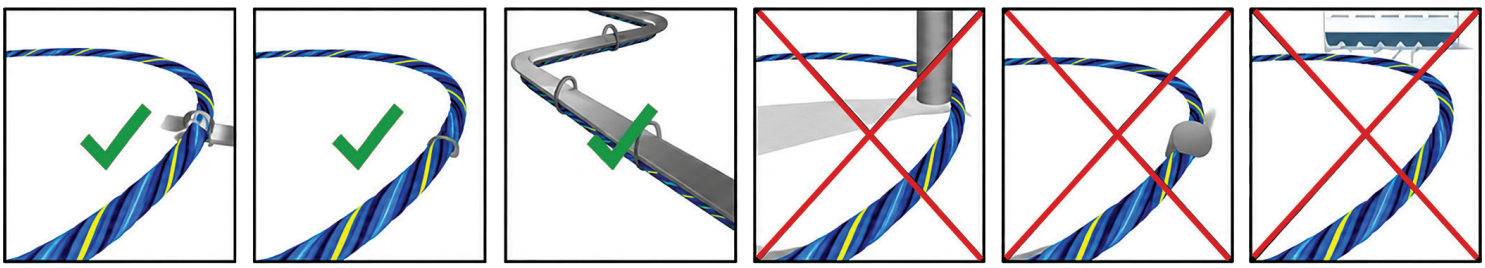

Dedicated line card installation | Hoisting along the pipeline | Fixed with metal boundless | Facing air conditioner | Glue fixed | Cable harness fixed

The Leak Sensing Cable should be installed away from high-temperature sources, open flames, strong magnetic fields, and wet or dusty environments. Avoid exposing the cable to sharp objects that could scratch, cut, or damage the cable sheath.

LET-Basic Sensor Specifications

Communication Parameters

Data transfer rate:	Baud rate 9600 BPS
Data transmission format:	N (parity check), 8(data bit), 1(stop bit)
Device default address:	01
RS485 wiring port:	Standard two-wire asynchronous communication, 8RS+, 9 RS-

LET-Basic Communications Protocol

(1) Send the Command:

Address	Function Code	Data start bit (high + low)		Number of Data (high + low)		CRC16 Check
1 byte	1 byte	1 byte	1 byte	1 byte	1 byte	2 byte

(2) Equipment Return Information:

Address	Function Code	Byte Length	Data Value (high + low)		CRC16 Check
1 byte	1 byte	1 byte	1 byte	1 byte	2 byte

(3) Protocol Data:

Function Code	Register Bit	Data Address	Number of Data	Data Value Definition
04H	30001	0000H	1	Device address code: 01-255
	30002	0001H	1	Query equipment status: 00 normal, 02 alarm
	30004	0003H	1	Inquiry Relay Status: 00 Relay Disconnected, 01 Relay Inhaled
06H	40001	0000H	1	Modify the device address: 01-255
	40005	0004H	1	Control Relay: 00 Relay Disconnected, 01 Relay Suction

Example

Content	Dispatch Orders	Return Information	Explain
Read device address	01 04 00 00 00 01 31 CA	01 04 02 00 01 78 F0	The device address is 01
Read device Status	01 04 00 01 00 01 60 0A	01 04 02 00 00 B9 30	The equipment is in normal condition
Read relay status	01 04 00 03 00 01 C1 CA	01 04 02 00 00 B9 30	Relay disconnection
Modify device address	01 06 00 00 00 C7 C8 58	01 06 00 00 00 C7 C8 58	Modify device address to 199
Modify relay status	01 06 00 03 00 01 B8 0A	01 06 00 03 00 01 B8 0A	Control relay suction

IMPORTANT: All material in this article, including illustrations, Is believed to be true and reliable. However, users should independently judge the suitability of each product for their specific use. And under no circumstances will Amphenol or its distributors be liable for incidental, indirect or consequential damages arising from the sale, resale, use or misuse of this product. Product specifications or production processes are subject to change without notice.

LET-Basic Sensor Specifications

Type	Product	Specification	Description
LET-Basic	Leak Controller	Dimensions/Weight	L86*W58*H52mm;100g
		Plastic Casing	Black fireproof ABS material, DIN 35mm track installation
		Detection Sensitivity	Full-range stepless adjustment, response time less than 1 second (at maximum sensitivity)
		Power Requirement	12-24VDC/AC, standby current 70mA, alarm current 120mA
		Relay Output	1SPDT normally open and normally closed output, with a maximum output power of 220VAC/2A
		RS485 Output	RS + RS- dual communication interfaces, device address 1 - 255
	Non-positioning Detection Cable	Weight	30g/m
		Cable Diameter	5.5mm
		Cable Length	15m supplied with kit. Custom lengths are avaialble up to 500m
		Maximum Exposure Temperature	85°C
	Module	Patch Cable	Optional
		Lead Cable	Length 3m
		Cable Connector	Standard component
		Hold Downs	Standard component

The LET-Basic System includes:

- Controller
- Power Extension Wire
- Lead Cable - 3 meters (~10ft)
- Testing Cable - 15 meters (~50ft)
- Wire End Connector

LET-Basic Ordering Number: RLDS-B-L15

LET-Basic Sensor Optional Gateway with Wifi

Functional Description

The gateway (with 1 Ethernet port, 1 RS485 serial port, dynamically supporting 256 points) supports the collection of Modbus RTU/TCP and more than 500 protocols, simultaneously forwarding it to BACnet IP and Modbus RTU/TCP servers. It also features WeChat alarms, MQTT server and the ability to upload projects to the cloud. The gateway is configured using X2View software. Users can configure it based on the existing equipment's point list, convert it to standard BACnet IP or Modbus RTU/TCP, and upload it to the hardware gateway. BACnet/Modbus clients can then access the data of on-site equipment through the gateway.

Note: For the data collection side of this gateway, Modbus registers start from decimal address 1 (Base1), while hexadecimal addresses start from 0 (Base0); for the forwarding side, Modbus register base addresses all start from 1 (Base1).

Operating Environment

The X2View configuration software supports multiple operating systems, including Win 7, Win 8, Win 10, Win 11, Win Server 2008, Win Server 2016, and more. The hardware gateway comes with a built-in WEB server, which supports remote access to the configuration screens within the gateway using browsers such as Google Chrome, Microsoft Edge, Apple's Safari, Firefox, Opera, and 360 Speed Mode.

Supported Register Types and Quantities

Note: The number of register points is dynamically supported, with a total limit of up to 256 points. The BACnet/Modbus register types and maximum number of points supported are shown in the table below.

BACnet Register Types	BACnet Register Points
AI (Read-only)	256
AO (Read and Write)	256
AV (Read and Write)	256
BI (Read-only)	256
BO (Read and Write)	256
BV (Read and Write)	256
MI (Read-only)	256
MO (Read and Write)	256
MV (Read and Write)	256

Modbus Register Types	Modbus Register Points
0X (Coil Status) Read and Write	256
1X (Input Status) Read-only	256
4X (Holding Register) Read and Write	256
3X (Input Register) Read-only	256

Notes:

4X and 3X register address = transfer register address *2+1

0X and 1X register address = transfer register address +1

Hardware Parameters

OS	Linux	Power supply	AC/DC 12~24V
CPU	1 Core 750MHz	Dimensions (L×W×H):	119mm x 55mm x 33mm
RAM	64M	Weight:	200g Not including antenna
Flash	32M	Material:	Galvanized Steel
Power	6W	Installation:	DIN-Rail/Wall-mounted
Ethernet Ports:	1x 10M/100M NIC	Temperature:	-20 ~ +70°C (working) -40 ~ +85°C (storage and transportation)
Serial Ports:	1x RS485 (Electromagnetic isolation)	Humidity:	Operating: 20-90% RH (non-condensing) Storage and Transportation: 15-95%RH (non-condensing) 15 95 no condensation (storage and transportation)

WiFi Connection: Support WiFi 5

Amphenol Sensors

www.amphenol-sensors.com

© 2026 Amphenol Corporation. All Rights Reserved. Specifications are subject to change without notice.
Other company names and product names used in this document are the registered trademarks or trademarks of their respective owners.