NOVA SENSOR
AN AMPHENOL COMPANY

NPA

Surface-Mount Pressure Sensor Series

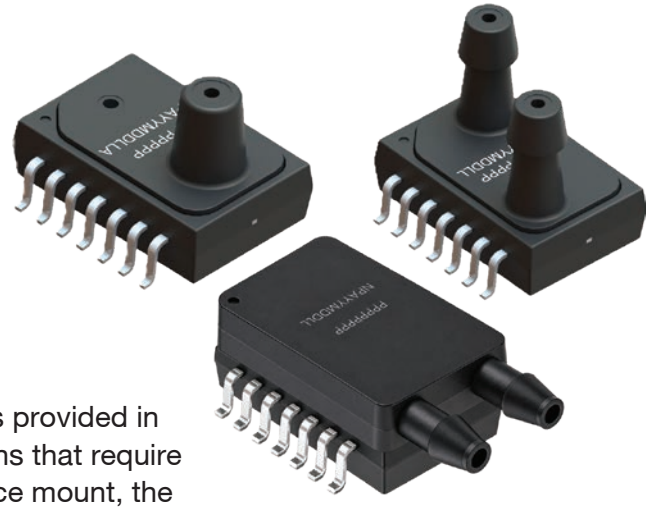

The **NPA Series of Surface-Mount Pressure Sensors** is provided in a miniature size as a cost effective solution for applications that require calibrated performance. Packaged in a SOIC14 pin surface mount, the NPA Series is available in gauge, absolute and differential pressure ranges with either mV, amplified analog or digital outputs. The sensor is intended for printed circuit board mounting and delivered in tape and reel to simplify manufacturing handling.

Features

- Surface-mountable
- Differential, gauge, absolute and low pressure
- 2” H_2O to 30 psi full scale
- Output Options: Amplified Analog, Digital (I^2C SPI and other outputs may be available by request), Uncalibrated mV
- On chip temperature sensor in digital mode
- Operating temperature range: -40°C to 125°C
- Total Error Band: <±1.5% FSO at 5” H_2O to 30 psi
  <±2.5% FSO at 2” H_2O
- Up to 60 psi proof pressure
- Ultra low profile side port option now available
- Automation ready

Amphenol
Sensors

General NPA Specifications

Parameter	Value	Units	Notes
Environmental			
Temperature Range			
Operating	-40 to +125	°C	-40 to +257°F
Compensated	0 to 60	°C	+32 to +157°F
Storage	-40 to +125	°C	-40 to +257°F
Mechanical			
Weight	~1	grams	
Media Compatibility			
Positive differential and gauge ports	Compatible with exposed materials		1
Negative differential ports	Compatible with exposed materials		2

Notes:
1. Exposed materials are thermoset plastic, silicon, epoxy, RTV, pyrex and silicone
2. Exposed materials are thermoset plastic, epoxy, copper alloy, RTV and silicone

Parameter	Units	Min	Typ	Max	Notes
Common Parameters					
Total Error Band (TEB) ≥5” H_2O	%FSO	-1.5	-	1.5	1
Total Error Band (TEB) 2” H_2O	%FSO	2.5	-	2.5	1
Accuracy (Linearity)	%FSO	-	±0.25	-	2
Offset Long Term Drift	%FSO/year	-	±0.1	-	2
Offset Long Term Drift 2” H_2O	%Span/year	-	±0.15	-	Typical
Proof Pressure (2” H_2O to 1 psi)	psi	-	5	-	-
Proof Pressure (5 psi to 30 psi)	psi	-	60	-	-
Pressure Ranges	-	10” H_2O	-	30 psi	-

Notes:
1. Total Error Band including all errors by offset, span, non-linearity, hysteresis, repeatability, thermal effect etc.
2. Offset Long Term Drift based on HTOL testing
3. Maximum Pressure Package 140

Series	Excitation Voltage	Min/Max	Notes
NPA-100	1.5 mA	-	NPA Uncompensated, mV
NPA-300	3.3 V	3.135 V to 3.465 V	NPA Compensated, low power amplified analog
NPA-500	5.0 V	4.75 V to 5.25 V	NPA Compensated, amplified analog
NPA-700	5.0 V	4.75 V to 5.25 V	NPA Compensated, digital I^2C
NPA-730	3.3 V	3.135 V to 3.465 V	NPA Compensated, digital I^2C

Output Option: Amplified Analog

Analog Performance Parameters 5 Volt Excitation					
		2" H_2O		5" H_2O to 30psi	
Parameter	**Units**	**Min**	**Max**	**Min**	**Max**
Offset	Volts	0.40	0.60	0.44	0.56
Span (Absolute/Gauge)	Volts	4		4	
Analog Performance Parameters 3.3 Volt Excitation					
		2" H_2O		5" H_2O to 30psi	
Offset	Volts	0.44	0.56	0.46	0.54
Span (Absolute/Gauge)	Volts	2.5		2.5	

Typical Analog Circuits

Circuit layout same as "Ratiometric Voltage Output"

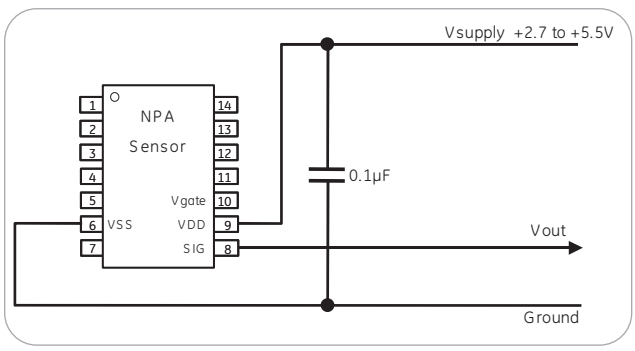

Ratiometric Voltage Output - Standard NPA

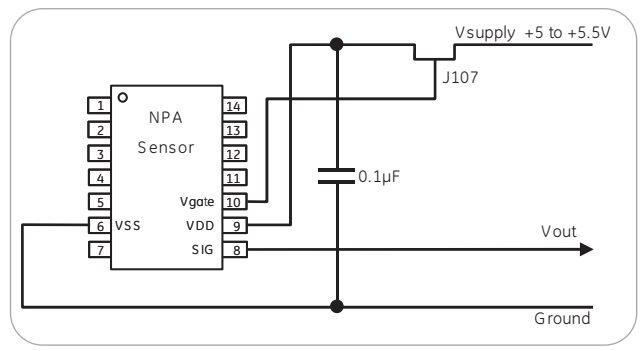

Ratiometric Voltage Output with Over-Voltage Protection - Request Required

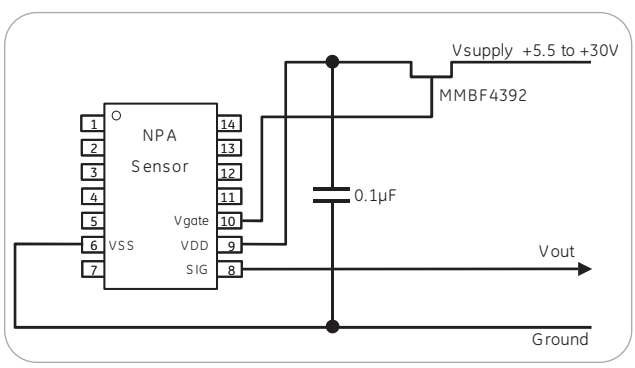

Absolute Voltage Output - Request Required

NPA Pinout

Pin #	Amplified Analog	Function Notes
1	--	
2	--	
3	NC	Do Not Connect
4	NC	Do Not Connect
5	--	
6	VSS	Ground Supply
7	--	
8	SIG	Analog Out, Calibration Interface
9	VDD	Supply Voltage
10	--	
11	NC	Do Not Connect
12	NC	Do Not Connect
13	--	
14	--	

Output Option: Digital I²C

Parameter	Units	Min	Typ	Max	Notes
Digital Performance					
Resolution (ADC)	bit	-	14	-	16383 steps
I²C Slave Address	-	-	0x28	-	-
Sampling Rate	kHz	-	2	-	-
I²C Bit Rate	kbits/s	100	-	400	-
I²C Mode	-	-	Update	-	-

Digital I²C Update Mode Output Options

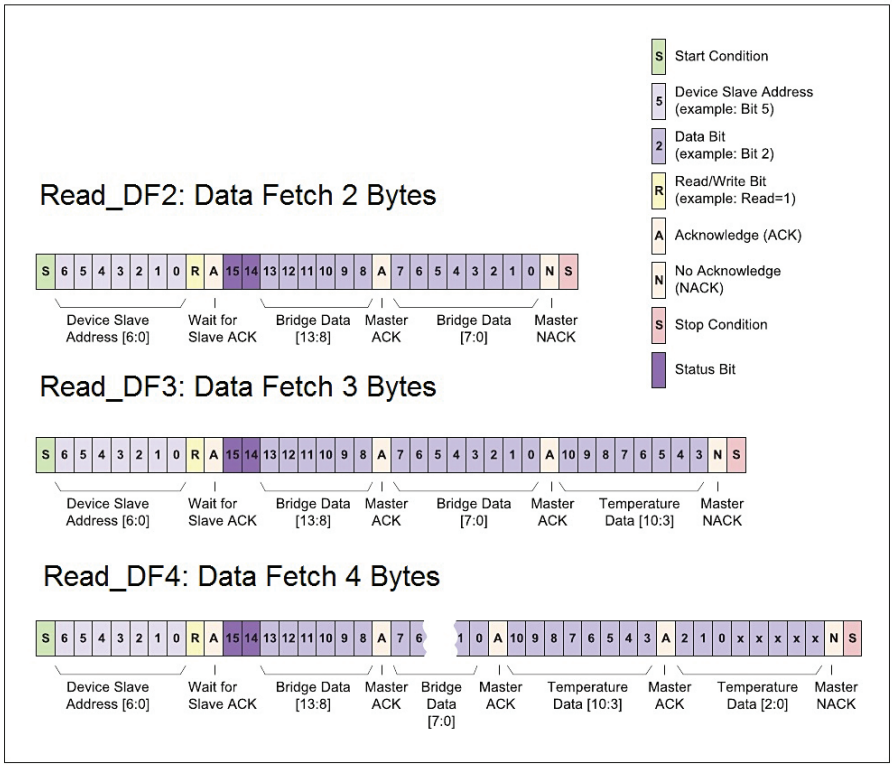

I²C Circuit NPA Pinout

Pin #	Digital I²C	Function Notes
1	--	-
2	--	-
3	NC	Do Not Connect
4	NC	Do Not Connect
5	--	-
6	VSS	Ground Supply
7	VDD	Supply Voltage
8	SDA	Serial Data, Calibration Interface
9	SCL	Serial Clock, Calibration Interface
10	--	-
11	NC	Do Not Connect
12	NC	Do Not Connect
13	--	-
14	--	-

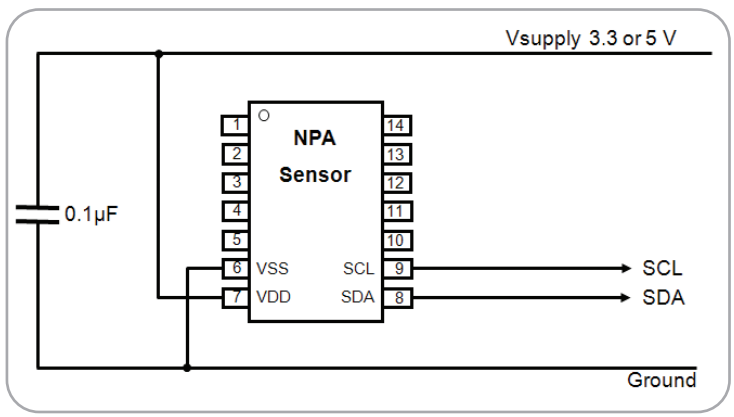

I²C Circuit NPA Pinout

Output Option: Uncalibrated mV

NPA Uncalibrated Performance									
		10“ H_2O to 1 psi				5 psi to 30 psi			
Parameter	Units	Min	Typ	Max	Notes	Min	Typ	Max	Notes
Pressure Range	psi	-	0.36 to 1	-	10” H_2O = 2.5 kPa	-	5 to 30	-	-
Excitation	mA	-	1.5	-	10 VDC Maximum	-	1.0	-	10 VDC Maximum
Input Impedance	Ω	-	5000±20%	-	-	-	5000 ±20%	-	-
Output Impedance	Ω	-	5000±20%	-	-	-	5000 ±20%	-	-
Zero Offset	mV	-	±75	-	-	-10	-	10	-
Full Scale Output	mV	-	40 to 120	-	10” H_2O	100	100 to 166	166	5 psi to 30 psi
	-	-	75 to 135	-	1 psi	-	-	-	-
Linearity	%FSO	-	±0.25	-	BFSL	-0.25	-	0.25	-
Pressure Hysteresis	%FSO	-	±0.20	-	-	-0.15	-	0.15	-
Temperature Coefficient of Zero	µV/ V / °C	-	±30	-	-	-0.20	-	0.20	-
Temperature Coefficient of Resistance	%/°C	-	0.29	-	-	-	0.38	-	-
Temperature Coefficient of Sensitivity	%FSO/°C	-	-0.2	-	-	-	-0.19	-	-
Thermal Hysteresis of Zero	%FSO	-	±0.15	-	-	-0.2	-	0.2	-
Position Sensitivity	%FSO	-	0.2	-	-	-	N/A	-	-

* Not Available for <10” H_2O

NPA Pinout

Pin #	Uncalibrated mV	Function Notes
1	--	-
2	--	-
3	VN	Sensor Interface Negative Output
4	VSSP	Sensor Interface Ground
5	--	-
6	NC	Do Not Connect
7	--	-
8	NC	Do Not Connect
9	NC	Do Not Connect
10	--	-
11	VP	Sensor Interface Positive Output
12	VDDP	Sensor Interface Positive Excitation
13	--	-
14	--	-

Side Port Barbed (mm)

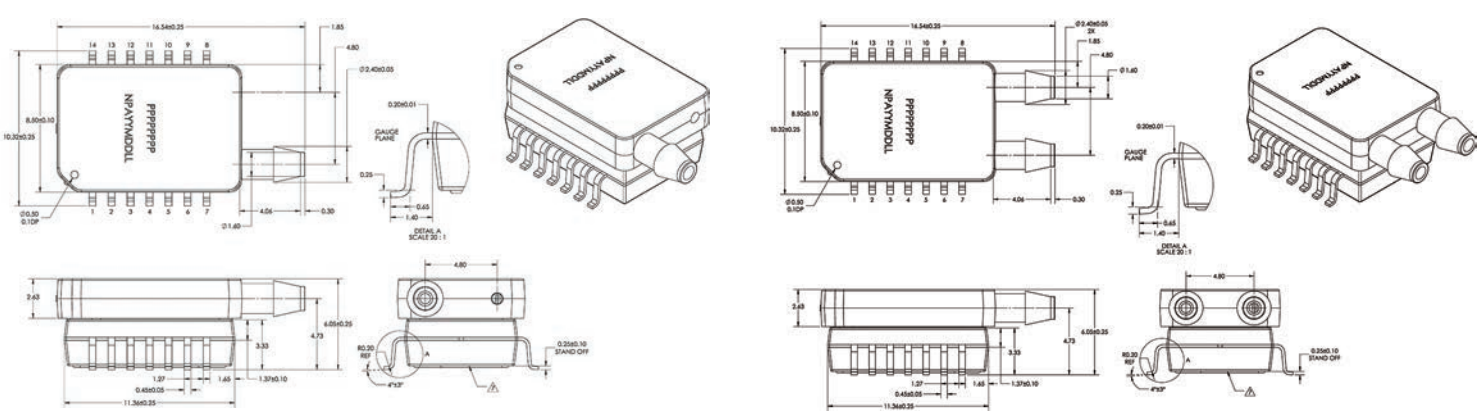

Manifold Design (mm)

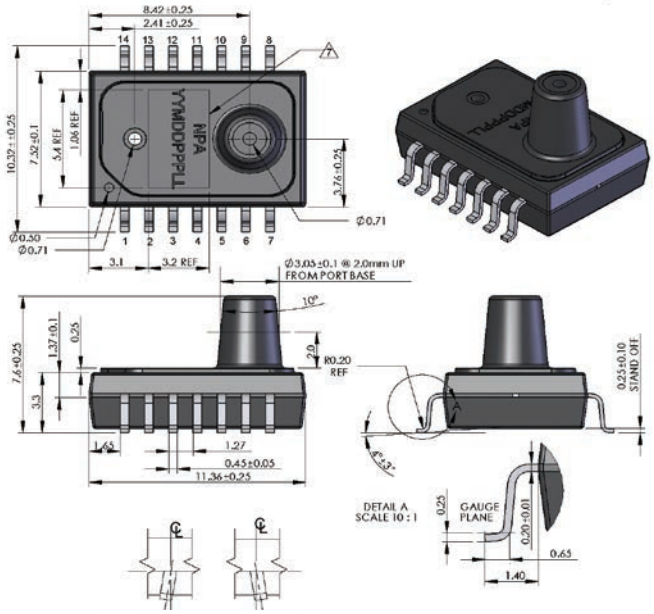

No Port Design (mm)

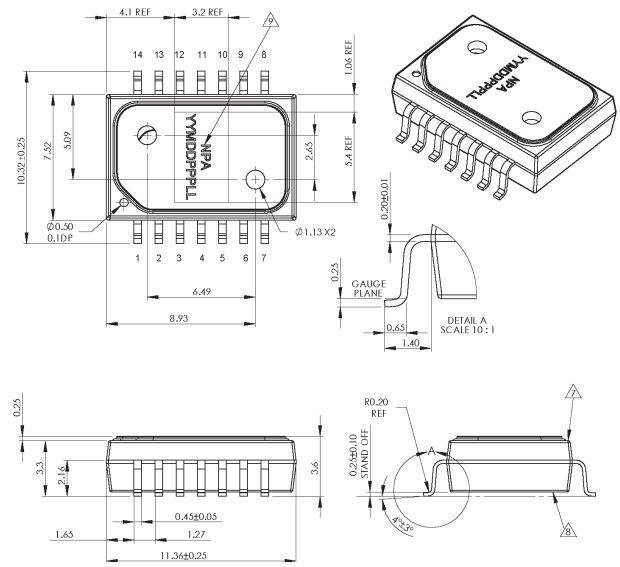

Barbed Design

Recommended tubing size of 3/32” ID, 7/32” OD, 1/16” wall thickness (mm)

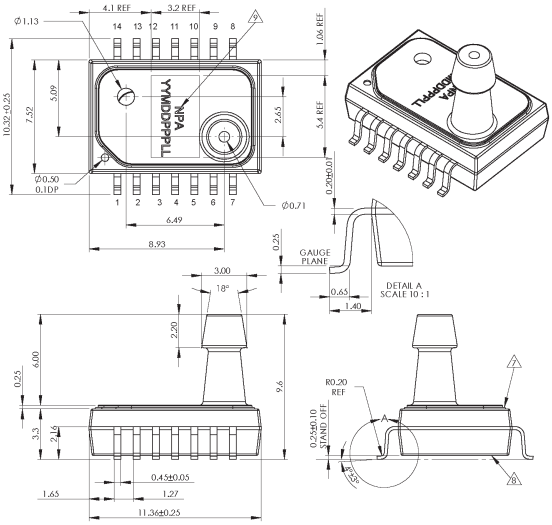

1 Barb Port — Request Required

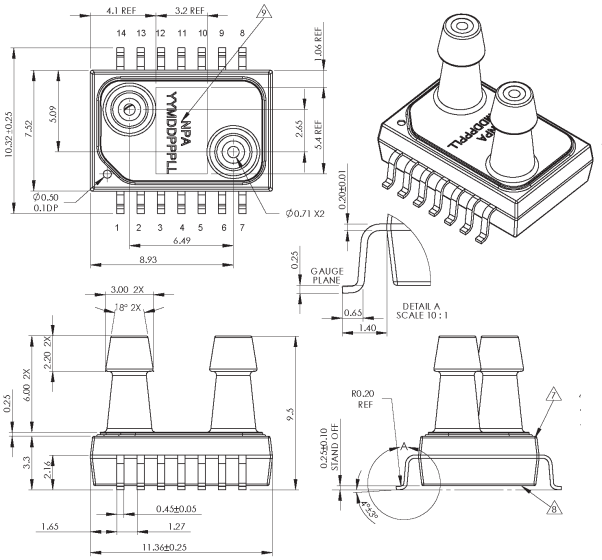

Suggested PCB Land Pattern

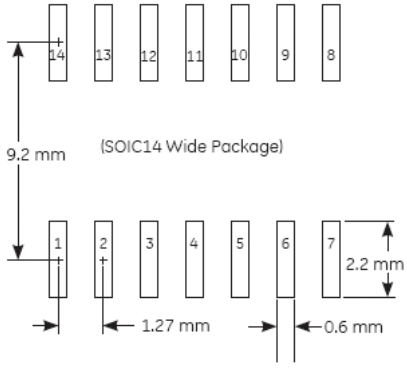

Package Leadframe Material: Alloy 194, NiPdAu Plated

Ordering Information

Model
NPA

Code	Description
100	mV Output, Ratiometric Uncalibrated Sensor***
300	Analog Amplified Output, 3.3Vdc Excitation, Calibrated Sensor
500	Analog Amplified Output, 5Vdc Excitation, Calibrated Sensor
700	I^2C - Digital Output, 5Vdc Excitation, Calibrated Sensor, 2 byte
730	I^2C - Digital Output, 3.3Vdc Excitation, Calibrated Sensor, 2 byte

Code	Port Type
M	1 manifold port for Gauge and Absolute pressure types
B	2 barbed ports for Gauge, Absolute and Differential pressure types**
N	Non ported ***
S	Side Port

Code	Pressure Range	
02W	2” H_2O	
05W	5” H_2O	
10W	10” H_2O	(2.5 kPa)
001	1 psi	(7 kPa)
005	5 psi	(35 kPa)
015	15 psi	(100 kPa)
030	30 psi	(200 kPa)

Code	Pressure Type
G	Gauge
D	Differential
A *	Absolute

NPA - [ ][ ] - [ ][ ]

*Note: * Absolute pressure ranges are available in 15 psiA and 30 psiA only*

*** 1 barbed port available upon request*

**** Order NPA-100N-XXXG in place of NPA-100N-XXXD*

- *Contact NovaSensor for custom pressure ranges*
- *Refer to application guide 910-289 for more information*
- *Product is RoHS:2010 compliant*
- *02W and 05W only available with Barbed Ports*
- *SPI Outputs available upon request, please contact NovaSensor*
- *Side port available only in 2 barbed ports, for other port types please contact NovaSensor*

NPA Product	Dual/Single Barb	Manifold	No Port
Qty/Tube	42 Units	42 Units	42 Units
Qty/Reel	300 Units	448 Units	896 Units
Qty/Reel/Carton	6 Reels	6 Reels	6 Reels
Qty/Carton	1800 Units	2688 Units	5376 Units

Warranty

NovaSensor warrants its products against defects in material and workmanship for 12 months from the date of shipment. Products not subjected to misuse will be repaired or replaced. NovaSensor reserves the right to make changes without further notice to any products herein. NovaSensor makes no warranty, representation or guarantee regarding the suitability of its products for any particular application. NovaSensor does not assume any liability arising out of the application or use of any product or circuit and specifically disclaims, and all liability, without limitation consequential or incidental damages. The foregoing warranties are exclusive and in lieu of all other warranties, whether written, oral, implied or statutory. No implied statutory warranty or merchantability or fitness for particular purpose shall apply.

Amphenol
Sensors

www.novasensor.com

www.amphenol-sensors.com

© 2026 Amphenol Corporation. All Rights Reserved. Specifications are subject to change without notice.
Other company names and product names used in this document are the registered trademarks or trademarks of their respective owners.

AS-920-477P - 10/2026